XZM-CT50A01

PRECISION CURRENT SENSE TRANSFORMER

FEATURES

- Measuring current transformer acc. IEC 61869-1, IEC 61869-2
- Designed for IEC 61851-1 charging applications
- Ideal for current / power monitoring and metering applications
- Current rating 50 Arms
- Primary to secondary insulation according OVC III / PD 3
- Dielectric strength 4 kV AC
- UL approved class B insulation system
- TÜV type approved

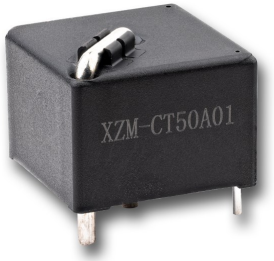

ELECTRICAL DATA

Primary current rating overload withstand impulse current withstand	 50 A 70 A (1min.) 2 kA (half wave)
Approved ratings primary current extended current secondary current short time thermal current system voltage	(TÜV) 50 A 120 % 50 mA 1 kA ≤ 800 V
Working frequency	50/60 Hz (sin.)
Turns ratio N_S:N_P	1000:1
Accuracy classification magnitude error phase error	(at R_L=50Ω) Class 0.2 (acc. IEC 61869-2) ≤ 0.5% (< 0.1% typ. @ 0.5 - 50 A) ≤ 1° (< 0.3° typ. @ 0.5 - 50 A)
Secondary output transformation ratio max. voltage burden resistor R_L	 50 mV/A (typ. Ta=23°C, R_L=50Ω, f=50Hz) 3.0 V 50 Ω (recommended)
Windings PRI DC resistance SEC DC resistance	 < 0.2 mΩ (typ.) ≤ 60 Ω (< 50 Ω typ.)
Dielectric strength PRI to SEC	(at sea level, 1mA, 50/60Hz, 1sec.) 4 kV AC
Insulation PRI to SEC	(acc. IEC60664-1) Reinforced (300 VAC, OVC III, PD 3)
Isolation spacing clearance/creepage solid insulation (dti)	(Primary to Secondary) ≥ 11.5 mm 1.0 mm

GENERAL DATA

Temperature range operating / storage	 -40°C (-40°F) to 85°C (185°F)
Vibration resistance	0.062" (1.5 mm) DA at 10–55 Hz
Shock resistance	10 g
Enclosure material group flammability	 IIIa UL94 V-0
Terminals	Tinned copper alloy
Soldering preheating soldering	(referring IEC 61760-1 wave soldering) 120°C (248°F) / ≤ 120 s 260 ±5°C (500 ±9°F) / ≤ 10 s
Cleaning max. solvent temp. max. immersion time	 80°C (176°F) 30 seconds
Dimensions length (max.) width (max.) height (max.)	 23.0 mm (0.906") 23.0 mm (0.906") 20.0 mm (0.787")
Weight	23 grams (approx.)
Compliance	RoHS, REACH
Agency approvals	TÜV: R 50576118
Electrical insulation system	Class B
Packing unit in pcs	60 per plastic tray / 420 per carton box

WIRING DIAGRAM

Burden resistor R_L and meter not included and shown for reference only.
Dots indicate winding directions.

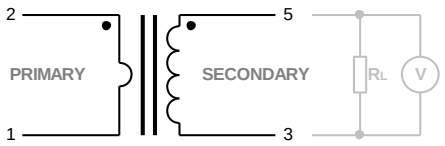

ORDERING DATA

XZM-CT50A01-SF □□□

Special Options
nil: standard version
(xxx): customized special version

XZM-CT50A01

TYPICAL CHARACTERISTICS

Magnitude error at R_L = 50Ω, I_{DC} = 0

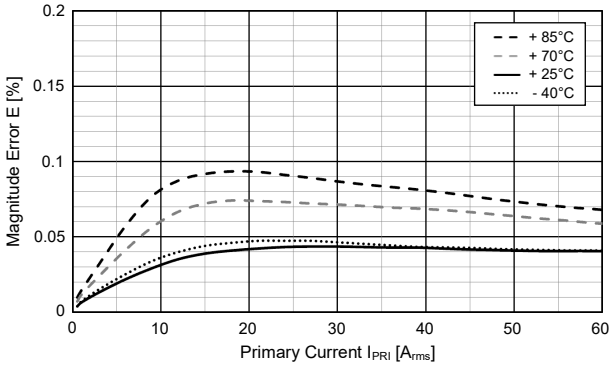

Phase error at R_L = 50Ω, I_{DC} = 0

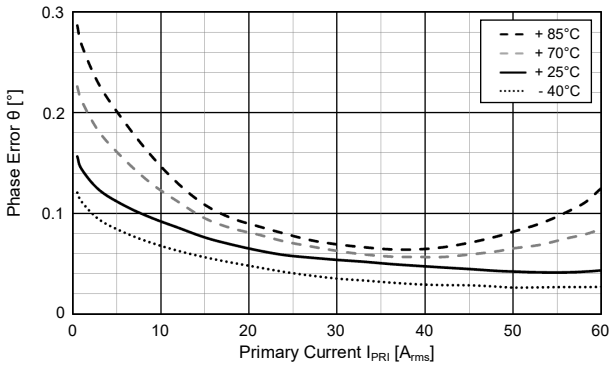

Excitation graph

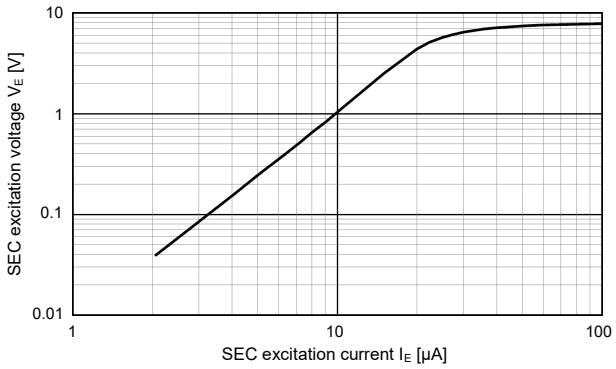

MECHANICAL DATA

Dimensions in mm. Pin dimensions for reference only and given without tin coating.

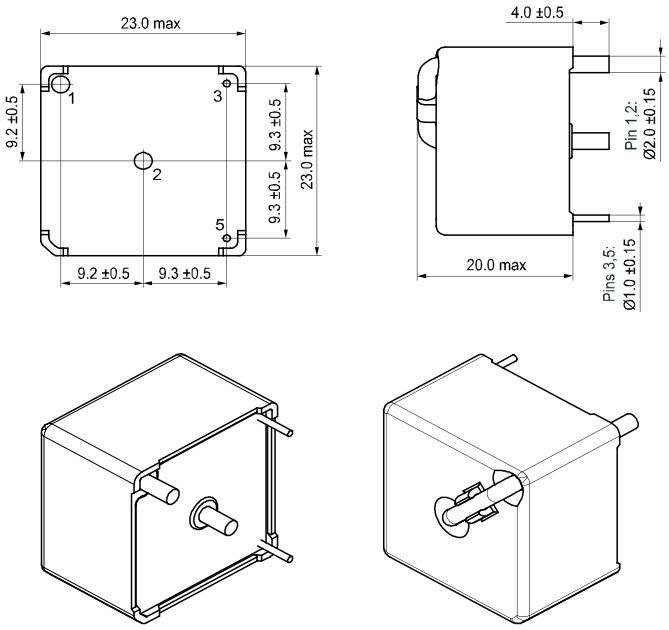

CAD data in attachment of the datasheet.

PC BOARD LAYOUT

Layout recommendation. Dimensions in mm.
Viewed towards terminals.

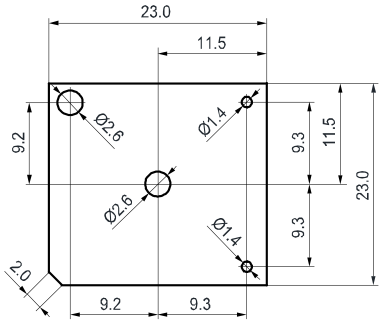

NOTES

1. All values in this datasheet are at reference temperature of 23°C (73°F) unless stated otherwise..
2. Do not leave the secondary winding open circuited when the primary winding is energized. This may damage the secondary winding and leads to excessive core losses.
3. For automated dual wave soldering process we recommend preheating with 120°C (248°F) for max. 120 seconds and a soldering temperature of 260 ±5°C (500 ±9°F) for max. 10 seconds soldering time (max. 5 seconds per wave). For manual soldering we recommend 350°C (662°F) max. temperature for max. 5 seconds. During the soldering process, no force may be exerted on the terminals.
4. During storage, transport and usage, ensure a dry, non-condensing and non-icing environment.
5. The datasheet and the component's specifications are subject to change without notice.

XZM-CT50A01

DISCLAIMER

The specification provides an overview of the most significant product features. Any individual applications and operating conditions are not taken into consideration. It is recommended to test the product under application conditions. Responsibility for the application remains with the customer. Proper operation and service life cannot be guaranteed if the part is operated outside the specified limits.

ZETTLER GROUP

Building on a foundation of more than a century of expertise in German precision engineering, ZETTLER Group is a world-class enterprise, engaged in the design, manufacturing, sales and distribution of electronic components. Our industry leadership is based on a unique combination of engineering competence and global scale.

For more information on other ZETTLER Group companies, please visit zettler-group.com. For support on this product or other ZETTLER relays, please visit one of the group sites below.

SITES FOR ZETTLER COMPONENTS

NORTH AMERICA

American Zettler, Inc.
www.azettler.com
sales@azettler.com

EUROPE

Zettler Electronics, GmbH
www.zettlerelectronics.com
office@zettlerelectronics.com

Zettler Electronics, Poland
www.zettlerelectronics.pl
office@zettlerelectronics.pl

CHINA

Zettler Group, China
www.zettlercn.com
relay@zettlercn.com

ASIA PACIFIC

Zettler Electronics (HK) Ltd.
www.zettlerhk.com
sales@zettlerhk.com